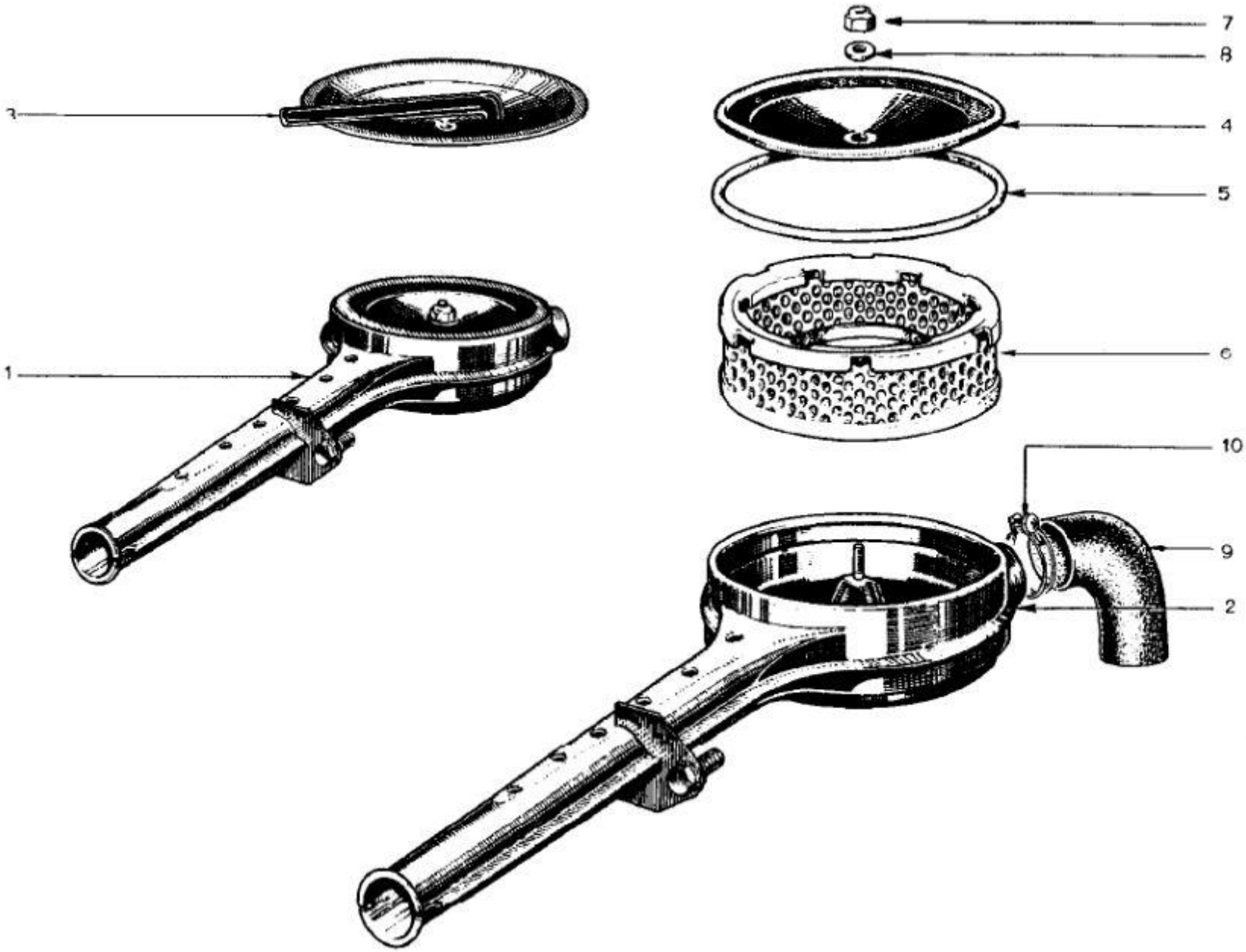
7
8
3
4
5
1
6
10
9
2

Item	Lotus #	S1	S1A/B	S2	S2 Fed	TC	TC Fed	TCS	TCS F	LHD	RHD	Description	Change Point Notes Bulletin Reference
1	046E6275	1	1	1								Air Filter Assembly (697-04)	
1	054E6009				1							Air Filter Assembly (821-30)	
2	046E6280	1	1	1	1							Air Filter Body	
3	046E6277	1	1	1								Cover - Air filter with seal ring (697-04)	
4	A046E6277				1							Cover - Air filter with seal ring (821-30)	
5	046E6278	1	1	1	1							Seal ring	
6	046E6279	1	1	1	1							Air filter element	
7	046E6452	1	1	1	1							Nut - Cover to body	
8	A046E6466	1	1	1	1							Washer - Cover to body	
9	046E6425	1	1	1	1							Hose - Rocker cover to air filter	
10	A046E6465	1	1	1	1							Clip	