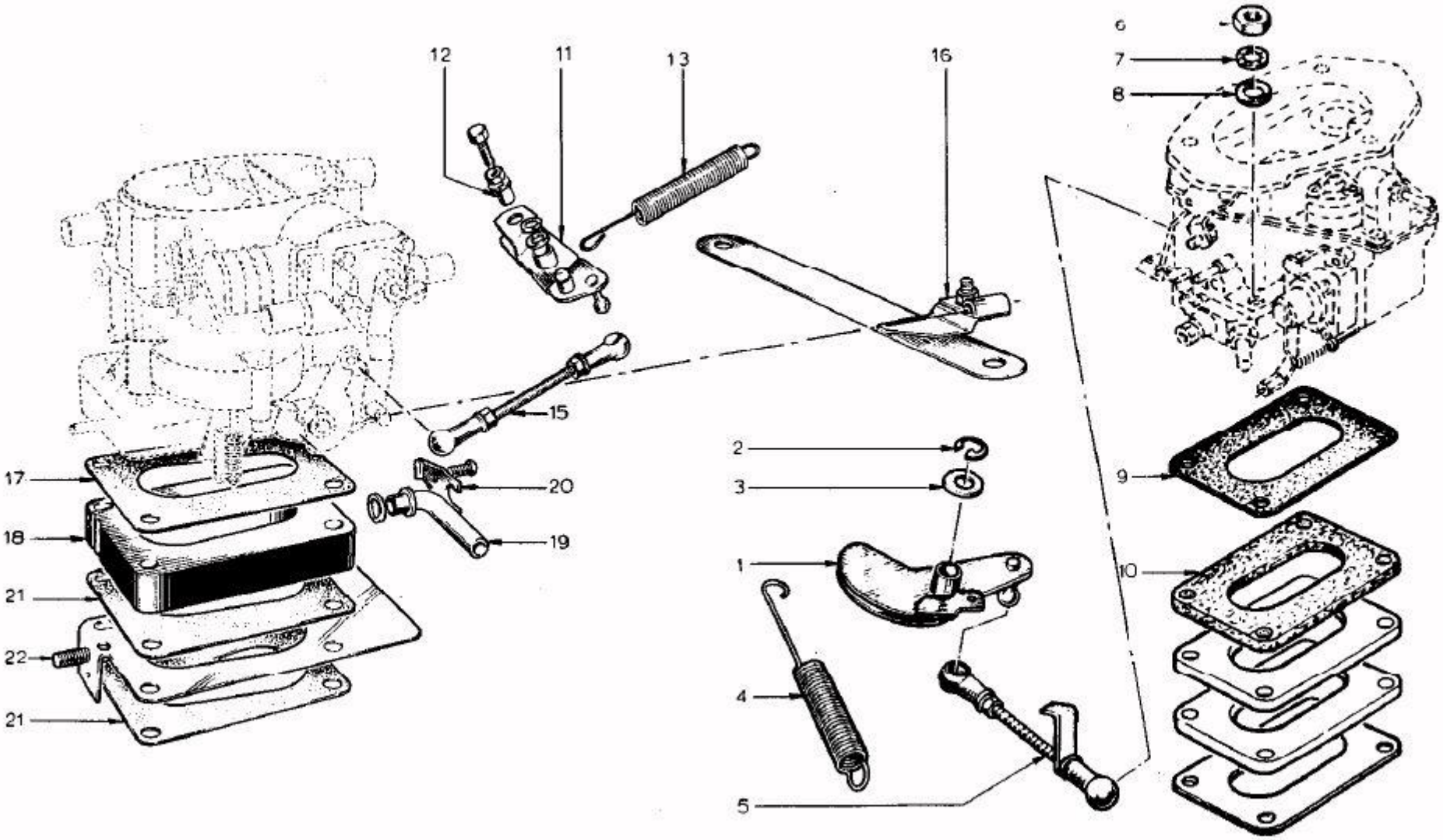
12
11
13
16
6
7
8
15
2
3
20
19
17
18
21
22
21
1
4
5
9
10

Item	Lotus #	S1	S1A/B	S2	S2 Fed	TC	TC Fed	TCS	TCS F	LHD	RHD	Description	Change Point Notes Bulletin Reference
1	046E6152	1	1	1								Relay Lever	M.O.T. 697-04 - R9210
2	046E6151	1	1	1								Circlip	M.O.T. 697-04 - R9210
3	A046W6002	1	1	1								Washer - ? mm.	M.O.T. 697-04 - R9210
4	046E6402	1	1	1								Return Spring	M.O.T. 697-04 - R9210
5	046E6153	1	1	1								Operating Lever	M.O.T. 697-04 - R9210
6	A046W6023	4	4	4								Nut	M.O.T. 697-04 - R9210
7	A046W6001	4	4	4								Star Washer	M.O.T. 697-04 - R9210
8	046E6154	4	4	4								Plain Washer - 8 mm.	M.O.T. 697-04 - R9210
9	046E6155	3	3	3								Joint	M.O.T. 697-04 - R9210
10	046E6156	2	2	2								Insulator	M.O.T. 697-04 - R9210
11	A054E?				1							Relay Lever	M.O.T. 821-30 - R9211
12	A054E?				1							Collar	M.O.T. 821-30 - R9211
13	A054E?				1							Return Spring	M.O.T. 821-30 - R9211
15	A054E?				1							Operating Lever	M.O.T. 821-30 - R9211
16	A054E?				1							Support	M.O.T. 821-30 - R9211
17	A054E?				1							Joint	M.O.T. 821-30 - R9211
18	A054E?				1							Insulator	M.O.T. 821-30 - R9211
19	A054E?				1							Elbow	M.O.T. 821-30 - R9211
20	A054E?				1							Clip	M.O.T. 821-30 - R9211
21	A054E?				1							Joint	M.O.T. 821-30 - R9211
22	A054E?				2							Support Plate	M.O.T. 821-30 - R9211
22	A054E?				1								