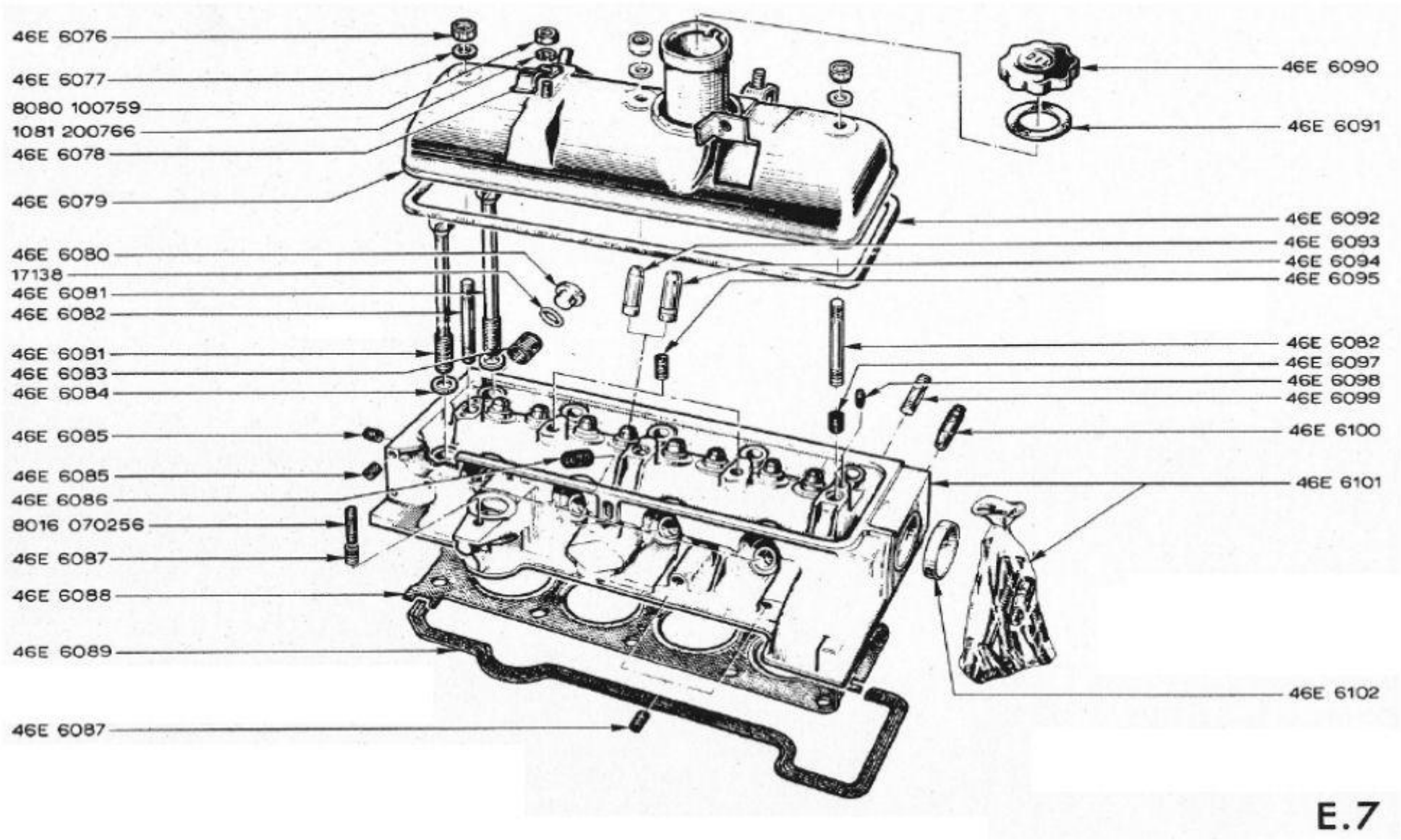
46E 6076
46E 6077
8080 100759
1081 200766
46E 6078
46E 6079
46E 6080
17138
46E 6081
46E 6082
46E 6081
46E 6083
46E 6084
46E 6085
46E 6085
46E 6086
8016 070256
46E 6087
46E 6088
46E 6089
46E 6087
46E 6090
46E 6091
46E 6092
46E 6093
46E 6094
46E 6095
46E 6082
46E 6097
46E 6098
46E 6099
46E 6100
46E 6101
46E 6102
E.7

Item	Lotus #	S1	S1A/B	S2	S2 Fed	TC	TC Fed	TCS	TCS F	LHD	RHD	Description	Change Point Notes Bulletin Reference
46E6076	46E6076	3	3									Nut - Rocker Cover	
46E6077	46E6077	3	3									Washer - Rocker Cover	
8080100759	8080100759	1	1									Nut -	
1081200766	1081200766	1	1									Washer -	
46E6078	46E6078	1	1									Mounting Bracket	
46E6079	46E6079	1	1									Rocker Cover - or 046E6390 or 046E6079	
46E6080	46E6080	1	1									Plug (697-04 only)	
17138	17138	1	1									Seal Ring	
46E6081	46E6081	5	5									Cylinder Head Bolt (697-04)	
46E6082	46E6082	3	3									Stud - Cam Support Pillar	
46E6083	46E6083	1	1									Heli Coil Insert	
46E6084	46E6084	10	10									Washer - Cylinder Head Bolt (697-04)	Up to Eng. No. 0565 Qty 10 Eng. No. 0566 to 0866 Qty 8 From Eng. No. 0867 Qty 9
46E6085	46E6085	10	10									Heli Coil Insert	
46E6086	46E6086	4	4									Heli Coil Insert - or 046E6392	
8016070256	8016070256	1	1									Stud - Distributor to Cylinder Head	
46E6087	46E6087	3	3									Heli Coil Insert	
46E6088	46E6088	1	1									Cylinder Head Gasket (697-04)	
46E6089	46E6089	1	1									Joint Cylinder Head (697-04)	
46E6090	46E6090	1	1									Oil Filler Cap	
46E6091	46E6091	1	1									Seal Ring - Oil Filler Cap - or 046E6393	
46E6092	46E6092	1	1									Rocker Cover Gasket	
46E6093	46E6093	8	8									Valve Guide - 13.10 mm. - or 046E6094	
46E6094	46E6094	8	8									Valve Guide - 13.25 mm. - or 046E6093	
46E6095	46E6095	2	2									Heli Coil Insert	
46E6097	46E6097	4	4									Heli Coil Insert	
46E6098	46E6098	2	2									Dowel Pin	
46E6099	46E6099	4	4									Stud	
46E6100	46E6100	1	1									Connector (697-04)	
46E6101	46E6101	1	1									Cylinder Head (697-04) replaced by A046E6101 & 2 of 054E6010 Nut	
46E6102	46E6102	1	1									Plug	