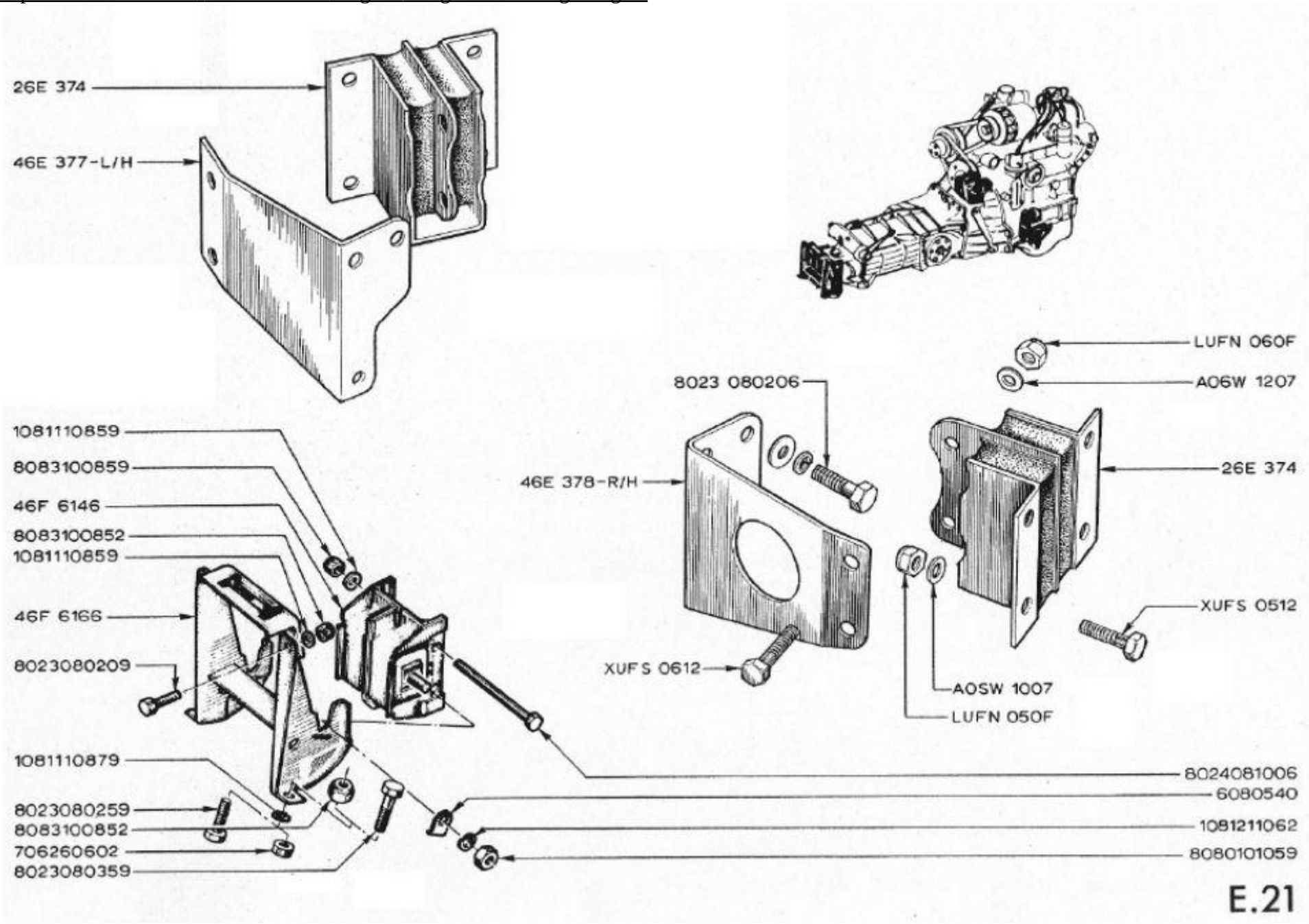
26E 374
46E 377-L/H
LUFN 060F
A06W 1207
8023 080206
1081110859
8083100859
46E 378-R/H
26E 374
46F 6146
8083100852
1081110859
46F 6166
XUFS 0512
8023080209
XUFS 0612
A05W 1007
LUFN 050F
1081110879
8024081006
6080540
8023080259
8083100852
1081211062
706260602
8080101059
8023080359
E.21

Item	Lotus #	S1	S1A/B	S2	S2 Fed	TC	TC Fed	TCS	TCS F	LHD	RHD	Description	Change Point Notes Bulletin Reference
26E374	26E374	2	2									Engine Mounting - replaced by 054E6000	
46E377	46E377	1	1									Mounting Bracket LH	
108110859	108110859	2	2									Washer - Gearbox Mounting to Gearbox	
8083100859	8083100859	2	2									Nut - Gearbox Mounting to Gearbox	
46F6146	46F6146	1	1									Gear Box Mounting (697-04)	
46F6166	46F6166	1	1									Gear Box Mounting Bracket	
1081110879	1081110879	2	2									Washer - Gearbox Mounting to Chassis	
8023080259	8023080259	2	2									Bolt - Gearbox Mounting to Chassis	
706260602	706260602	2	2									Spacer - Gearbox Mounting to Chassis	
8023080359	8023080359	2	2									Nut	
8023080206	8023080206	4	4									Bolt - Engine Mounting to Chassis	
46E378	46E378	1	1									Mounting Bracket RH	
XUFS0612	XUFS0612	4	4									Bolt - Engine Mounting Bracket to Engine Mounting	
LUFN060F	LUFN060F	4	4									Nut - Engine Mounting Bracket to Engine Mounting	9/16" Nyloc
A06W1207	A06W1207	4	4									Washer - Engine Mounting Bracket to Engine Mounting	
XUFS0512	XUFS0512	8	8									Bolt - Engine Mounting to Chassis	3/4" long, all thread, 5/16" x 24 TPI, 1/2" head
A0SW1007	A0SW1007	8	8									Washer - Engine Mounting to Chassis	
LUFN050F	LUFN050F	8	8									Nut - Engine Mounting to Chassis	5/16" x 24 TPI, 1/2" head
8024081006	8024081006	2	2									Bolt - 8 x 100 mm - Gearbox Mounting to Gearbox	
6080540	6080540	2	2									Washer - Gear Box Mounting to Gear Box	
1081211062	1081211062	2	2									Washer - Gear Box Mounting to Gear Box	
8080101059	8080101059	2	2									Nut - Gear Box Mounting to Gear Box	
8083100852	8083100852	2	2									Nut	